KingTron *Stainless Steel & Carbon Steel valve series*

1-PIECE REDUCED PORT BALL VALVES

FIG. A-122T : THREADED ENDS, 2000 PSI (138 BAR) W.O.G., BARSTOCK BODY.

FEATURES:

- Strengthened barstock construction secures 2000 psi working pressure rating. Reinforced TFE seats increase durability.
- NACE Trim complied with NACE MR-01-75.
- Separating packing nut and handle nut secure NO STEM LEAKAGE even when handle is removed.
- Bottom-loaded blow-out proof stem.
- Basic design complied with ANSI B16.34 & EN 12516-1.
- NPT threaded ends complied with ANSI B 1.20.1..
  Rc, Rp & G Threaded ends complied with BS 21/2779, JIS B-0203/0202, DIN 259/2999, ISO 228-1, AS1722.1/1722.2 are upon request.
- Tested according to API 598.

MATERIALS LIST:

NO.	PARTS	A-122T
1	BODY	ASTM A108-CARBON STEEL
2	SEAT	REINFORCED TFE
3	BALL	ASTM A351-CF8/304
4	THRUST WASHER	PTFE
5	PACKING NUT	AISI 304
6	STEM	ASTM A276-304
7	HANDLE NUT	ZINC PLATED STEEL
8	HANDLE WASHER	ZINC PLATED STEEL
9	STEM PACKING	PTFE
10	GASKET	PTFE
11	RETAINER	ASTM A108-CARBON STEEL
12	HANDLE	ZINC PLATED STEEL
13	HANDLE COVER	PVC

OPTIONS:

-L: LOCKING DEVICE.
-V: VENTED BALL.

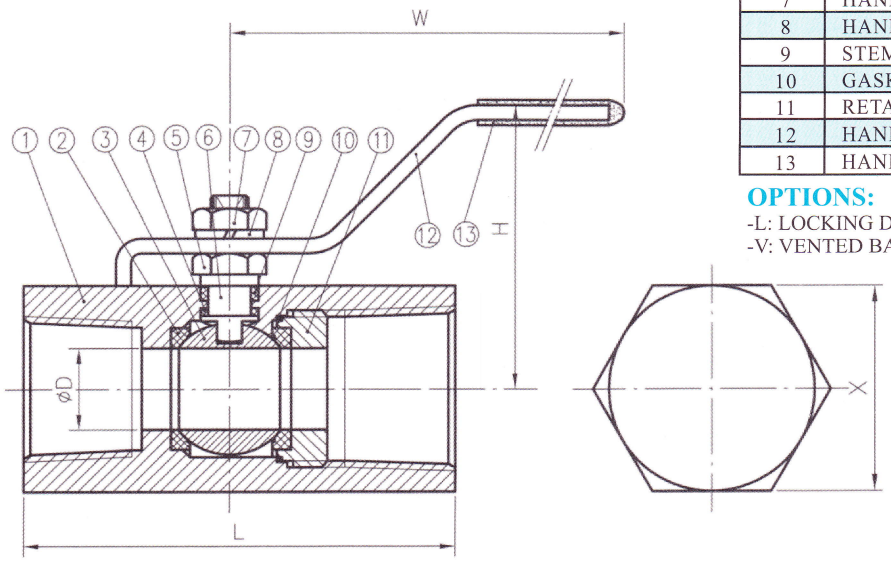

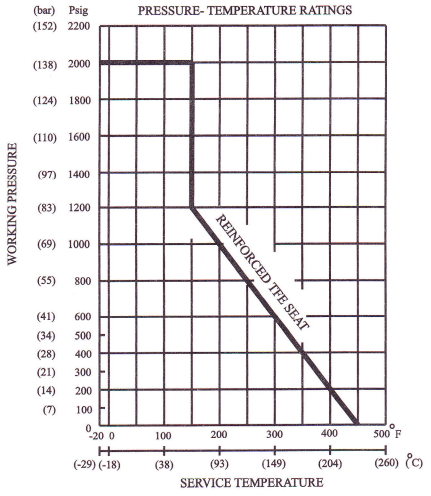

DIMENSIONS

SIZE		ϕD		L		H		W		X	
in	mm	in	mm	in	mm	in	mm	in	mm	in	mm
1/4"	8	0.20	5	1.73	44	1.22	31	2.64	67	0.75	19
3/8"	10	0.28	7	1.89	48	1.30	33	3.15	80	0.83	21
1/2"	15	0.36	9.2	2.44	62	2.38	60.5	4.13	105	1.14	29
3/4"	20	0.49	12.5	2.76	70	2.50	63.5	4.13	105	1.38	35
1"	25	0.63	16	3.39	86	2.68	68	4.25	108	1.61	41
1 1/4"	32	0.79	20	3.70	94	2.99	76	5.51	140	2.24	57
1 1/2"	40	0.98	25	4.02	102	3.07	78	5.51	140	2.24	57
2"	50	1.26	32	4.49	114	3.31	84	7.09	180	2.87	73

We reserve the rights to modify our product design or construction for improvement without prior notice.

KingTron *Stainless Steel & Carbon Steel valve series*

1-PIECE REDUCED PORT BALL VALVES

FIG. S-121T / C-121T: THREADED ENDS, 1000 PSI (69 BAR) W.O.G..

FEATURES:

- Bottom-loaded blow-out proof stem.
- Belleville washer assures leak-free seal on cool-down and as packing wears.
- Basic design complied with ANSI B16.34 & EN 12516-1.
- NPT threaded ends complied with ANSI B 1.20.1..
- Rc, Rp & G Threaded ends complied with BS 21/2779, JIS B-0203/0202, DIN 259/2999, ISO 228-1, AS1722.1/1722.2 are upon request.
- Tested according to API 598.

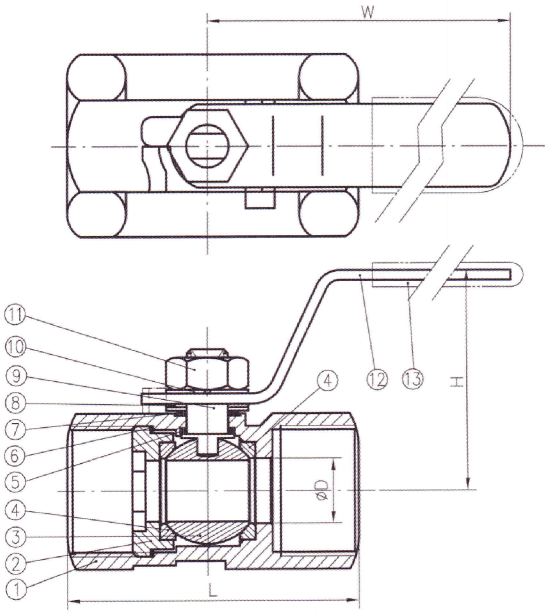

MATERIALS LIST:

NO.	PARTS	S-121T	C-121T
1	BODY	ASTM A351-CF8M	ASTM A216-WCB
2	RETAINER	ASTM A351-CF8M/316	ASTM A216-WCB/A108
3	BALL	ASTM A351-CF8M/316	ASTM A351-CF8/304
4	SEAT	PTFE	PTFE
5	THRUST WASHER	PTFE	PTFE
6	GASKET	PTFE	PTFE
7	STEM PACKING	PTFE	PTFE
8	BELLEVILLE WASHER	AISI 301	AISI 301
9	STEM	ASTM A276-316	ASTM A276-304
10	HANDLE WASHER	AISI 304	AISI 304
11	HANDLE NUT	AISI 304	AISI 304
12	HANDLE	AISI 304	ZINC PLATED STEEL
13	HANDLE COVER	PVC	PVC

OPTIONS:

-L: LOCKING DEVICE.
-V: VENTED BALL.

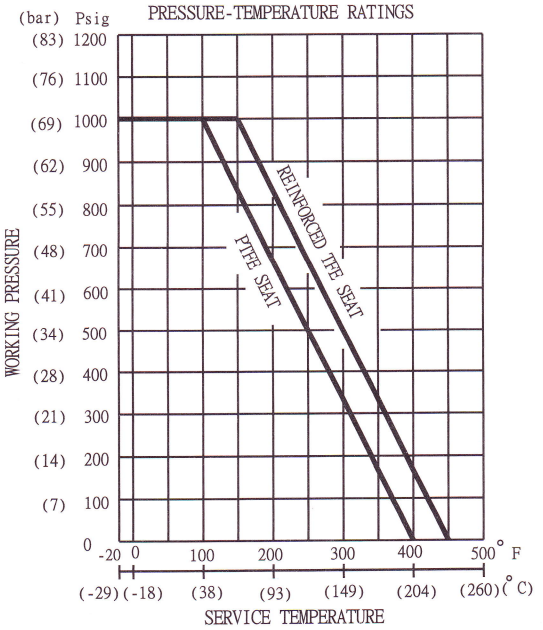

DIMENSIONS

SIZE		ϕD		L		H		W	
in	mm	in	mm	in	mm	in	mm	in	mm
1/4"	8	0.20	5	1.54	39	1.30	33	2.68	68
3/8"	10	0.28	7	1.73	44	1.38	35	3.11	79
1/2"	15	0.36	9.2	2.20	56	1.65	42	3.54	90
3/4"	20	0.49	12.5	2.32	59	1.81	46	3.54	90
1"	25	0.63	16	2.80	71	1.97	50	4.09	104
1 1/4"	32	0.79	20	3.03	77	2.20	56	4.09	104
1 1/2"	40	0.98	25	3.27	83	2.60	66	4.96	126
2"	50	1.26	32	3.94	100	2.83	72	4.96	126

We reserve the rights to modify our product design or construction for improvement without prior notice.

KingTron *Stainless Steel & Carbon Steel valve series*

2-PIECE FULL PORT BALL VALVES

FIG. S-201T / C-201T: THREADED ENDS, 1000 PSI (69 BAR) W.O.G..

FEATURES:

- Adjustable packing gland.
- Bottom-loaded blow-out proof stem.
- Basic design complied with ANSI B16.34 & EN 12516-1.
- NPT threaded ends complied with ANSI B 1.20.1..
- Rc, Rp & G Threaded ends complied with BS 21/2779, JIS B-0203/0202, DIN 259/2999, ISO 228-1, AS1722.1/1722.2 are upon request.
- Tested according to API 598.

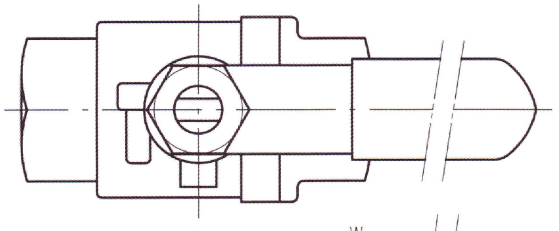

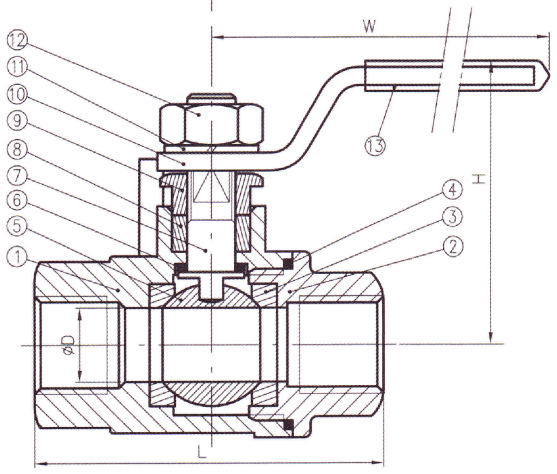

MATERIALS LIST:

NO.	PARTS	S-201T	C-201T
1	BODY	ASTM A351-CF8M	ASTM A216-WCB
2	END CAP	ASTM A351-CF8M	ASTM A216-WCB
3	SEAT	PTFE	PTFE
4	GASKET	PTFE	PTFE
5	BALL	ASTM A351-CF8M/316	ASTM A351-CF8/304
6	THRUST WASHER	PTFE	PTFE
7	STEM	ASTM A276-316	ASTM A276-304
8	STEM PACKING	PTFE	PTFE
9	GLAND	AISI 304	AISI 304
10	HANDLE	AISI 304	ZINC PLATED STEEL
11	HANDLE WASHER	AISI 304	AISI 304
12	HANDLE NUT	AISI 304	AISI 304
13	HANDLE COVER	PVC	PVC

OPTIONS:

-L: LOCKING DEVICE.
-M: TAPPED MOUNTING PAD FOR SIZES 1 1/4" TO 4".
-V: VENTED BALL.

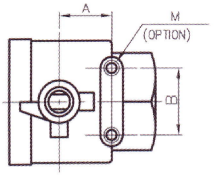

FOR 1 1/4"~3"

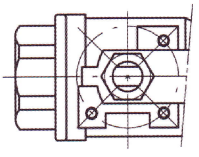

FOR 4"

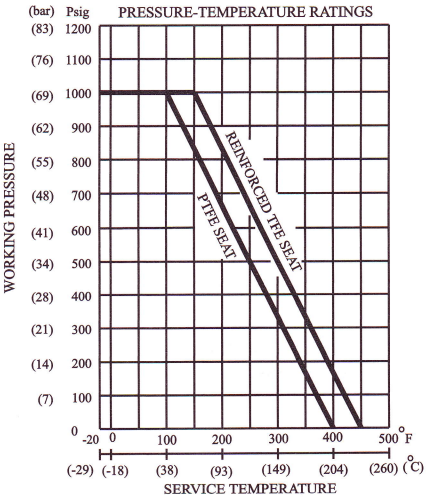

DIMENSIONS

SIZE		ΦD		L		A		B		H		W		M (OPTION)
in	mm	in	mm	in	mm	in	mm	in	mm	in	mm	in	mm	
1/4"	8	0.43	11	2.17	55	-	-	-	-	2.09	53	3.70	94	-
3/8"	10	0.49	12.5	2.17	55	-	-	-	-	2.09	53	3.70	94	-
1/2"	15	0.59	15	2.56	65	-	-	-	-	2.09	53	3.70	94	-
3/4"	20	0.79	20	2.80	71	-	-	-	-	2.22	56.5	3.70	94	-
1"	25	1.00	25.4	3.39	86	-	-	-	-	2.58	65.5	4.37	111	-
1 1/4"	32	1.26	32	3.86	98	0.93	23.6	1.50	38.1	2.80	71	4.37	111	1/4-20UNC
1 1/2"	40	1.50	38	4.37	111	0.93	23.6	1.50	38.1	3.15	80	5.37	136.5	1/4-20UNC
2"	50	1.97	50	4.96	126	0.93	23.6	1.50	38.1	3.52	89.5	5.37	136.5	1/4-20UNC
2 1/2"	65	2.56	65	6.38	162	1.38	35	2.17	55	5.06	128.5	9.57	243	1/4-20UNC
3"	80	3.15	80	7.09	180	1.38	35	2.17	55	5.49	139.5	9.57	243	1/4-20UNC
4"	100	3.94	100	9.09	231	-	-	-	-	6.59	167.5	10.79	274	M10

We reserve the rights to modify our product design or construction for improvement without prior notice.

KingTron *Stainless Steel & Carbon Steel valve series*

2-PIECE FULL PORT BALL VALVES

FIG. S-202T / C-202T: THREADED ENDS, 1/4" TO 2": 2000 PSI (138 BAR) W.O.G., 2 1/2" TO 4": 1500 PSI (103 BAR) W.O.G..

FEATURES:

- Strengthened construction secures 2000 psi working pressure rating. Reinforced TFE seats increase durability.
- Adjustable packing gland.
- Bottom-loaded blow-out proof stem.
- Basic design complied with ANSI B16.34 & EN 12516-1.
- NPT threaded ends complied with ANSI B 1.20.1..
- Rc, Rp & G Threaded ends complied with BS 21/2779, JIS B-0203/0202, DIN 259/2999, ISO 228-1, AS1722.1/1722.2 are upon request.
- Tested according to API 598.

MATERIALS LIST:

NO.	PARTS	S-202T	C-202T
1	BODY	ASTM A351-CF8M	ASTM A216-WCB
2	END CAP	ASTM A351-CF8M	ASTM A216-WCB
3	SEAT	REINFORCED TFE	REINFORCED TFE
4	BALL	ASTM A351-CF8M/316	ASTM A351-CF8/304
5	THRUST WASHER	PTFE	PTFE
6	GASKET	PTFE	PTFE
7	STEM	ASTM A276-316	ASTM A276-304
8	STEM PACKING	PTFE	PTFE
9	GLAND	AISI 304	AISI 304
10	HANDLE WASHER	AISI 304	AISI 304
11	HANDLE NUT	AISI 304	AISI 304
12	HANDLE	AISI 304	ZINC PLATED STEEL
13	HANDLE COVER	PVC	PVC

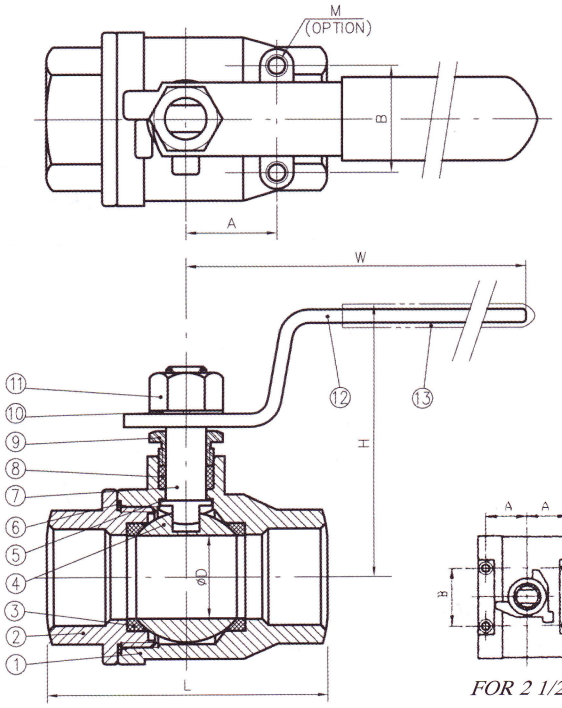

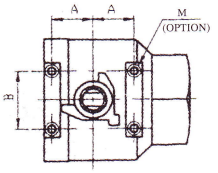

FOR 2 1/2"~3"

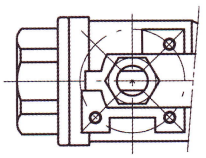

FOR 4"

OPTIONS:

-F: FIRE-SAFE DESIGN.
-L: LOCKING DEVICE.
-M: TAPPED MOUNTING PAD.
-V: VENTED BALL.

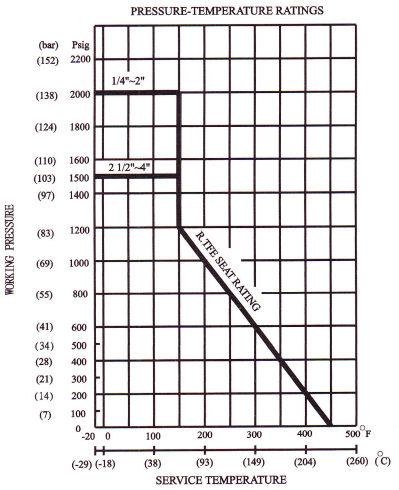

DIMENSIONS

SIZE		ϕD		L		A		B		H		W		M
in	mm	in	mm	in	mm	in	mm	in	mm	in	mm	in	mm	(OPTION)
1/4"	8	0.43	11	2.24	57	0.50	12.7	1.12	28.5	2.13	54	3.70	94	10-24UNC
3/8"	10	0.49	12.5	2.24	57	0.50	12.7	1.12	28.5	2.13	54	3.70	94	10-24UNC
1/2"	15	0.59	15	2.54	64.5	0.50	12.7	1.12	28.5	2.24	57	3.70	94	10-24UNC
3/4"	20	0.79	20	2.87	73	0.87	22.1	1.38	35	2.46	62.5	4.37	111	10-24UNC
1"	25	1.00	25.4	3.37	85.5	0.93	23.6	1.38	35	2.87	73	5.37	136.5	10-24UNC
1 1/4"	32	1.26	32	3.94	100	0.93	23.6	1.50	38.1	3.09	78.5	5.37	136.5	1/4-20UNC
1 1/2"	40	1.50	38	4.41	112	0.93	23.6	1.50	38.1	3.48	88.5	6.57	167	1/4-20UNC
2"	50	1.97	50	5.12	130	0.93	23.6	1.50	38.1	3.84	97.5	6.57	167	1/4-20UNC
2 1/2"	65	2.56	65	6.38	162	1.38	35.0	2.17	55.0	5.06	128.5	9.57	243	1/4-20UNC
3"	80	3.15	80	7.09	180	1.38	35.0	2.17	55.0	5.49	139.5	9.57	243	1/4-20UNC
4"	100	3.94	100	9.09	231	-	-	-	-	6.59	167.5	10.79	274	M10

We reserve the rights to modify our product design or construction for improvement without prior notice.

KingTron *Stainless Steel & Carbon Steel valve series*

2-PIECE BALL VALVES

FIG. S-203T / C-203T: THREADED ENDS, 3000 PSI (207 BAR) W.O.G., 1/4" TO 1 1/2": FULL PORT, 2": STANDARD PORT, 3": FULL PORT.

FEATURES:

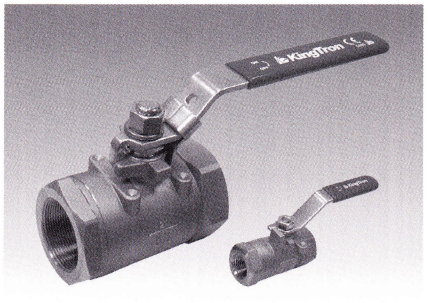

- Strengthened construction secures 3000 psi working pressure rating. Enlarged bottom-loaded blow-out proof stem.
- Gasket is placed ahead of the body cap threads, providing a tight seal and protection of threads from flow media.
- Vented ball equalizes pressure between the body cavity and the flow stream to prevent seat damage due to thermal cycling.
- Basic design complied with ANSI B16.34 & EN 12516-1.
- NPT threaded ends complied with ANSI B 1.20.1..
- Rc, Rp & G Threaded ends complied with BS 21/2779, JIS B-0203/0202, DIN 259/2999, ISO 228-1, AS1722.1/1722.2 are upon request.
- Tested according to API 598.

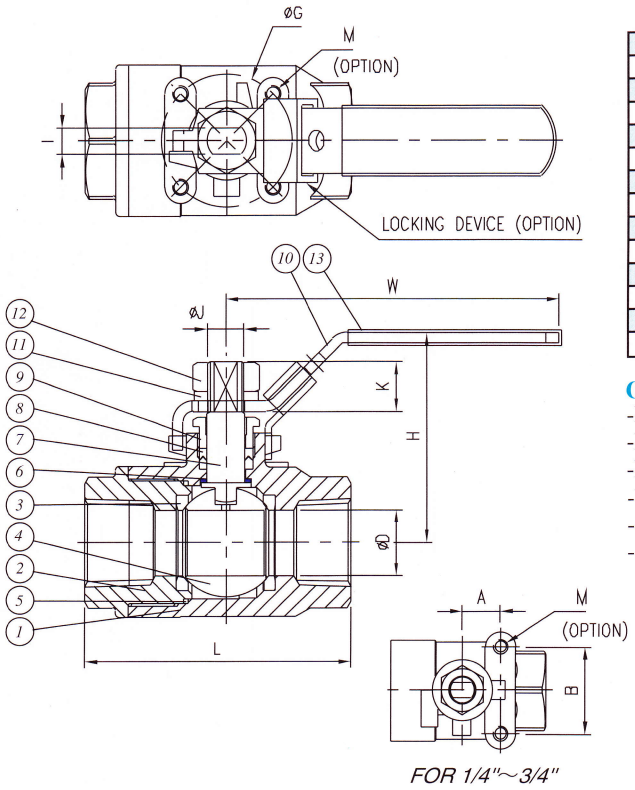

FOR 1/4"~3/4"

MATERIALS LIST:

NO.	PARTS	S-203T	C-203T
1	BODY	ASTM A351-CF8M	ASTM A216-WCB
2	END CAP	ASTM A351-CF8M	ASTM A216-WCB
3	SEAT	DELRIN	DELRIN
4	BALL	ASTM A351-CF8M / 316	ASTM A351-CF8 / 304
5	GASKET	PTFE	PTFE
6	THRUST WASHER	PTFE	PTFE
7	STEM	ASTM A276-316	ASTM A276-304
8	STEM PACKING	PTFE	PTFE
9	GLAND	AISI 304	AISI 304
10	HANDLE	AISI 304	ZINC PLATED STEEL
11	HANDLE WASHER	AISI 304	AISI 304
12	HANDLE NUT	AISI 304	AISI 304
13	HANDLE COVER	PVC	PVC

OPTIONS:

-L : LOCKING DEVICE.
-M: TAPPED MOUNTING PAD.
-F : FIRE - SAFE DESIGN.
-W: BODY JOINT FULLY WELDED.
-O: VITON O-RING ON STEM.
-A: ANTI-STATIC DEVICE.

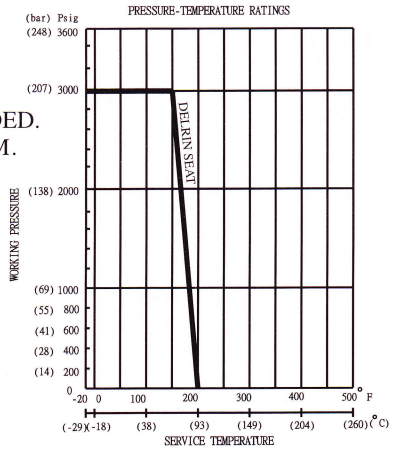

DIMENSIONS

SIZE		ϕD		L		H		W		I		ϕJ		K		ϕG		A		B		M
in	DN	in	mm	in	mm	in	mm	in	mm	in	mm	in	mm	in	mm	in	mm	in	mm	in	mm	
1/4"	8	0.37	9.5	2.52	64	2.13	54	3.70	94	0.20	5	0.31	8	0.37	9.5	—	—	0.50	12.7	1.12	28.5	10-24 UNC
3/8"	10	0.37	9.5	2.52	64	2.13	54	3.70	94	0.20	5	0.31	8	0.37	9.5	—	—	0.50	12.7	1.12	28.5	10-24 UNC
1/2"	15	0.49	12.5	2.83	72	2.13	54	4.37	111	0.20	5	0.31	8	0.37	9.5	—	—	0.50	12.7	1.12	28.5	10-24 UNC
3/4"	20	0.79	20	3.50	89	2.50	63.5	4.37	111	0.28	7	0.39	10	0.55	14	—	—	0.87	22.1	1.38	35	10-24 UNC
1"	25	0.98	25	4.02	102	3.11	79	6.57	167	0.39	10	0.55	14	0.75	19	1.97	50	—	—	—	—	M6-P1
1 1/4"	32	1.26	32	4.57	116	3.31	84	6.57	167	0.39	10	0.55	14	0.79	20	1.97	50	—	—	—	—	M6-P1
1 1/2"	40	1.50	38	4.88	124	4.29	109	8.66	220	0.47	12	0.75	19	1.14	29	2.76	70	—	—	—	—	M8-P1.25
2"	50	1.50	38	5.51	140	4.29	109	8.66	220	0.47	12	0.75	19	1.14	29	2.76	70	—	—	—	—	M8-P1.25
3"	80	3.15	80	8.07	205	5.94	151	14.57	370	0.63	16	0.98	25	1.34	34	4.02	102	—	—	—	—	M10-P1.5

We reserve the rights to modify our product design or construction for improvement without prior notice.

KingTron *Stainless Steel & Carbon Steel valve series*

2-PIECE CLASS 2500 BALL VALVES

FIG. S-206TM / C-206TM : THREADED ENDS, 6000 PSI (414 BAR) W.O.G., 1/4" TO 1 1/2": FULL PORT, 2": STANDARD PORT, ISO 5211 MOUNTING PAD, NACE MR-01-75.

FEATURES:

- Strengthened construction secures 6000 psi working pressure rating. Enlarged bottom-loaded blow-out proof stem.
- Gasket is placed ahead of the body cap threads, providing a tight seal and protection of threads from flow media.
- Vented ball equalizes pressure between the body cavity and the flow stream to prevent seat damage due to thermal cycling.
- Basic design complied with ANSI B16.34 & EN 12516-1.
- NPT threaded ends complied with ANSI B 1.20.1..
- Rc, Rp & G Threaded ends complied with BS 21/2779, JIS B-0203/0202, DIN 259/2999, ISO 228-1, AS1722.1/1722.2 are upon request.
- Tested according to API 598.

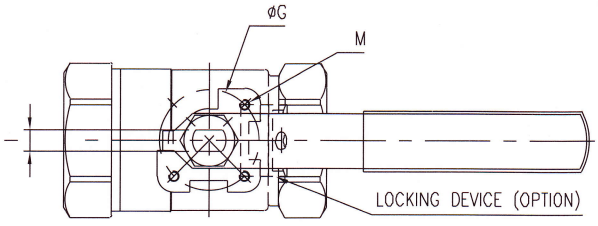

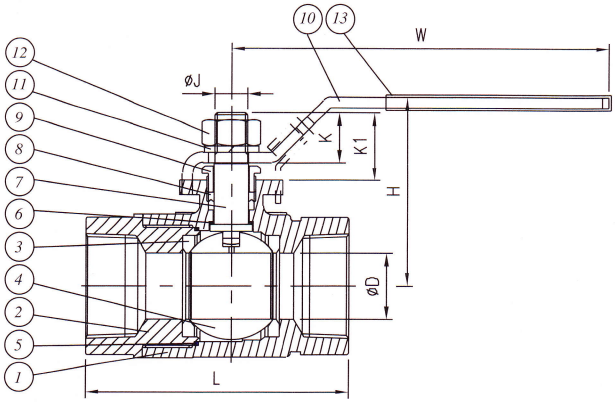

MATERIALS LIST:

NO.	PARTS	S-206TM	C-206TM
1	BODY	ASTM A351-CF8M	ASTM A216-WCB
2	END CAP	ASTM A351-CF8M	ASTM A216-WCB
3	SEAT	DELRIN	DELRIN
4	BALL	ASTM A351-CF8M / 316	ASTM A351-CF8 / 304
5	GASKET	PTFE	PTFE
6	THRUST WASHER	PTFE	PTFE
7	STEM	ASTM A276-316	ASTM A276-304
8	STEM PACKING	PTFE	PTFE
9	GLAND	AISI 304	AISI 304
10	HANDLE	AISI 304	ZINC PLATED STEEL
11	HANDLE WASHER	AISI 304	AISI 304
12	HANDLE NUT	AISI 304	AISI 304
13	HANDLE COVER	PVC	PVC

OPTIONS:

-L : LOCKING DEVICE.
-A: ANTI-STATIC DEVICE.
-F : FIRE - SAFE DESIGN.
-O: VITON O-RING ON STEM.
-W: BODY JOINT FULLY WELDED.

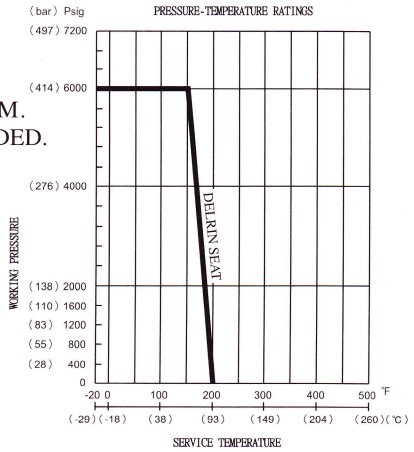

DIMENSIONS

SIZE		ϕD		L		I		ϕJ		K		K1		ϕG		M	H		W	
in	DN	in	mm	in	mm	in	mm	in	mm	in	mm	in	mm	in	mm		in	mm	in	mm
1/4"	8	0.37	9.5	2.80	71	0.20	5	0.31	8	0.31	7.8	0.50	12.8	1.42	36	M5	2.34	59.5	4.25	108
3/8"	10	0.37	9.5	2.80	71	0.20	5	0.31	8	0.31	7.8	0.50	12.8	1.42	36	M5	2.34	59.5	4.25	108
1/2"	15	0.49	12.5	3.19	81	0.20	5	0.31	8	0.31	7.8	0.50	12.8	1.42	36	M5	2.34	59.5	4.25	108
3/4"	20	0.79	20	3.78	96	0.28	7	0.39	10	0.55	14	0.83	21	1.65	42	M5	2.50	63.5	5.16	131
1"	25	0.98	25	4.25	108	0.39	10	0.55	14	0.75	19	1.07	27.2	1.97	50	M6	3.00	76.2	6.57	167
1 1/4"	32	1.26	32	4.72	120	0.39	10	0.55	14	0.79	20	1.11	28.2	1.97	50	M6	3.19	81.0	6.57	167
1 1/2"	40	1.50	38	5.12	130	0.47	12	0.75	19	1.14	29	1.56	39.5	2.76	70	M8	4.30	109.2	8.66	220
2"	50	1.50	38	5.91	150	0.47	12	0.75	19	1.14	29	1.56	39.5	2.76	70	M8	4.30	109.2	8.66	220

We reserve the rights to modify our product design or construction for improvement without prior notice.